INSTRUCTION MANUAL
with Catalog of Replacement Parts

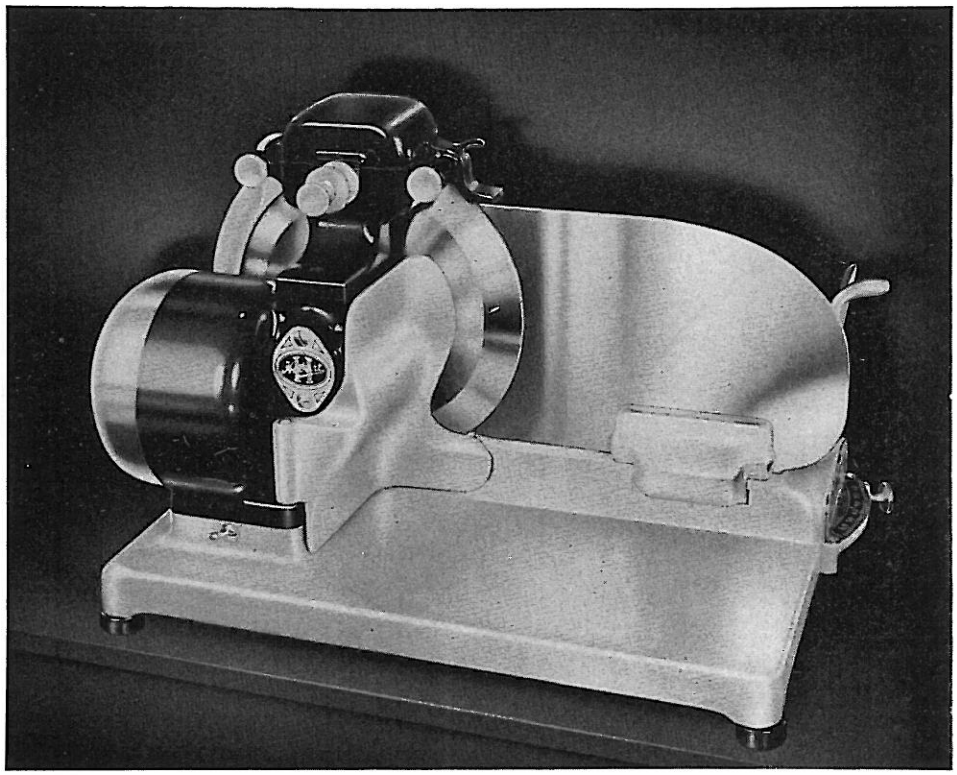

MODEL 210

MEAT SLICER

SPECIFICATION 3898

THE HOBART MANUFACTURING COMPANY

The World's Largest Manufacturer of Food, Kitchen, Bakery and Dishwashing Machines

TROY, OHIO, U. S. A.

FORM No. 6178

- THIS PAGE PURPOSELY LEFT BLANK -

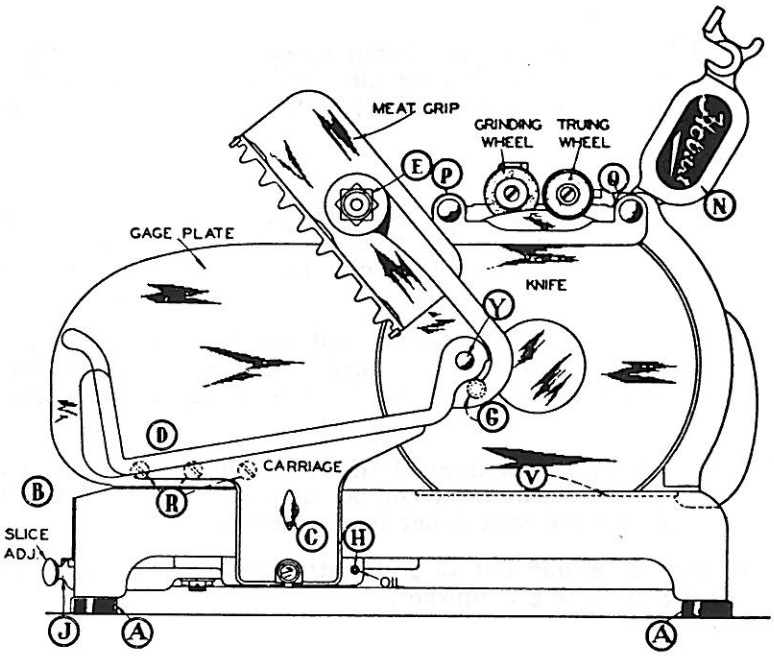

Fig. 1

Instructions For Hobart Slicer

Model 210

1 — INSTALLATION See that the four rubber feet (A) are in place. They are packed in a small cloth bag that is included with the shipment, and they may be inserted by twisting to the right, just as though they were screws. For installation on shipboard omit the rubber feet and secure the machine to the table with ½"-13 cap screws.

The electrical specifications for the motor will be found on the plate B at the slice adjusting end; be sure that they agree with those of the electric service before plugging into a socket the first time.

When the slice adjusting lever J is at zero the gage plate should be flush with the face of the knife; if by any chance it is not, see "Adjustment of Zero Point" under paragraph 7.

The thumb screw C that holds the carriage in place is drawn up very tight before shipment and a wrench may be needed to loosen it the first time. When in service keep this screw as tight as you can turn it with your fingers.

2 — SLICING FOODS Lay the bacon, or material to be sliced, in the carriage tray D, set the slice adjustment to the desired figure, and switch on the motor. When slicing, stand at the slice-adjustment end, grasp the meat grip handle E with your right hand and with it feed the food toward the gage plate and also move the carriage back and forth across the revolving knife. Your left hand will thus be free to arrange the slices on the receiving tray, as they come from the knife.

When slicing a long piece of meat set the grip on the top of it, but when the pieces are short (three or four inches) hold the grip behind the meat. You can then slice down to the last slice.

When desirable, the meat grip may be latched up by hooking the grip-arm under the stud G as shown in (Fig. 1).

A popular setting for slicing bacon is about No. 10 on the scale, but of course, this can be varied to suit the preference of your customers. After slicing an order always set the lever back to zero, for in that position the knife is fully guarded.

3 — REMOVING CARRIAGE Loosen the thumb screw C, and lifting the carriage straight up, remove it from the machine. When this is done a smooth working-table is exposed which facilitates de-crusting loaves of bread, and de-rinding slabs of bacon.

4 — CLEANING Wipe off the surface of the machine daily with a cloth wrung out in warm water. Once a week, saturate a bit of cloth with the tasteless oil that is furnished and rub over the entire machine. This not only cleanses but leaves a smooth wax-like surface that is easy to keep clean.

With the knife running, all guards in place, and the adjusting lever at zero, hold the cloth against the front surface of the knife and then against the back surface, for cleaning. Form the cloth into a large, loose pad for doing this and be careful not to let a stray end catch in the cutting edge.

Lift the polished plate V that is in front of the knife and wipe off any food that may cling to the edge next to the knife. The motor must not be running when this plate is lifted and the plate must always be down in place when wiping out back of the knife.

The slice deflector may be swung out to give better access to the space back of the knife, or it may be removed entirely by lifting it upward.

5 — SHARPENING This machine is equipped with a Hobart Stay Sharp Stainless Steel Knife, made and guaranteed by the Hobart Mfg. Co. It should be sharpened **only when dull.** For average use, it will retain its keen edge for several months. Never sharpen unless it is absolutely necessary.

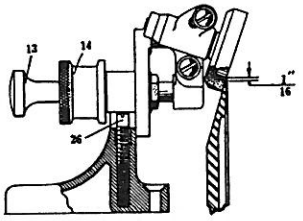

Fig. 2

The knife grinding attachment can be operated only when the housing is open. Loosen the two thumb screws P and Q, half a turn each, and swing up the cover N as shown in (Fig. 1). Always wipe off the knife before and after sharpening.

To sharpen the knife, start the motor and then press the knob 13 (Fig. 2). Use a moderate pressure and hold the grinding wheel against the knife for several seconds. The time required for grinding depends upon the condition of the knife. Then pull out on the knob 13 so that the truing wheel touches the knife for about one second. Then press the grinding wheel into contact again momentarily.

If you will loosen the large nut 14, the entire grinding wheel assembly can be removed from its housing. It is a good plan to keep it out except when sharpening the knife. This will help to keep it clean and prevent over-sharpening.

In time, the grinding surface of the sharpening wheels may become filled with metal or tallow. To correct such a condition, remove the wheels and scrub their grinding surfaces with a stiff brush and ammonia. After a thorough cleaning allow the wheels to dry before placing them back on the sharpener.

6 — LUBRICATION Very little lubrication will be needed. The carriage slideways are oiled by a system of wicks; add a few drops of oil once a month at H (Fig 1). A few drops of oil will be needed on the slide rod Y also.

Never use machine oil about a slicer; use only tasteless, odorless slicer oil. If unable to obtain it locally order your supplies from us.

The motor bearings and the knife shaft bearings are packed in grease and will not need additional lubricant the first year. Consult a Hobart Service man before adding grease.

7 — ADJUSTMENTS

(A) To Adjust Zero Point When the slice adjusting lever J is at the extreme right or zero position the gage plate should lie in the same plane as the face of the knife. If it does not, adjust as follows: First, turn the machine up on its side to expose the underneath parts, then loosen the screw L shown in (Fig. 3). Move the gage plate up to the level of the knife face, and the lever to zero, then tighten screw L.

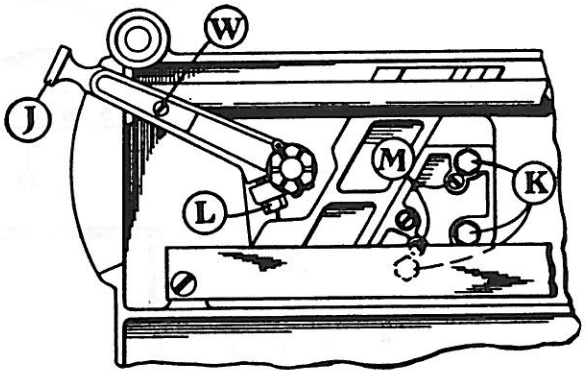

Fig. 3

(B) To take Up Looseness in Gage Plate Turn the machine on its side, loosen the three screws K slightly and then turn each of the two screws M a fraction of a turn to take up the looseness. Be sure to tighten the screws K again. (See Fig. 3).

(C) Adjusting Slice Deflector Clearance The slice deflector should come within a thirty-second of an inch from the back of the knife. If it does not, adjustment can be made by turning the slotted head of the stop screw that lies behind the deflector.

(D) To Adjust for Wear of the Knife Repeated sharpening will wear down the diameter of the knife and as the diameter becomes less three adjustments will be needed.

1—Move the gage plate over nearer to the knife. To do this, loosen the three screws R (Fig. 1), half a turn, give the outer edge of the gage plate a few light taps to move it nearer the knife, and then tighten screws R again.

2—Move the rear guard nearer the knife. To do this, take the guard off and screw the stop stud S down a little (See Fig. 4). Then loosen screw T and move the block U nearer the knife.

3—Let down the grinding wheels. Lift up the cover N (Fig. 2), loosen the nut 14, and remove the grinder unit. Then screw down the adjustment 26 until the cutting edge of the knife is a sixteenth of an inch higher than the inner rim of the grinding wheel, as shown in (Fig. 2.)

After the knife has worn down a quarter of an inch in diameter loosen the two screws that hold the grinding wheel support and change the angle of tilt slightly to shorten the bevel on the knife edge.

When the knife has worn down to about 9½″ in diameter replace it with a new one.

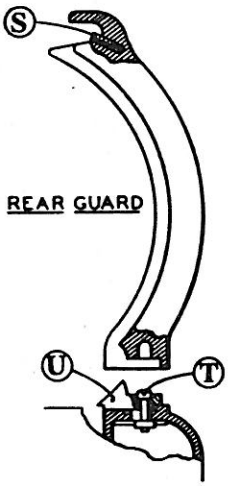

Fig. 4

(E) To Tighten Slice Adjustment, turn screw W, (Fig. 3).

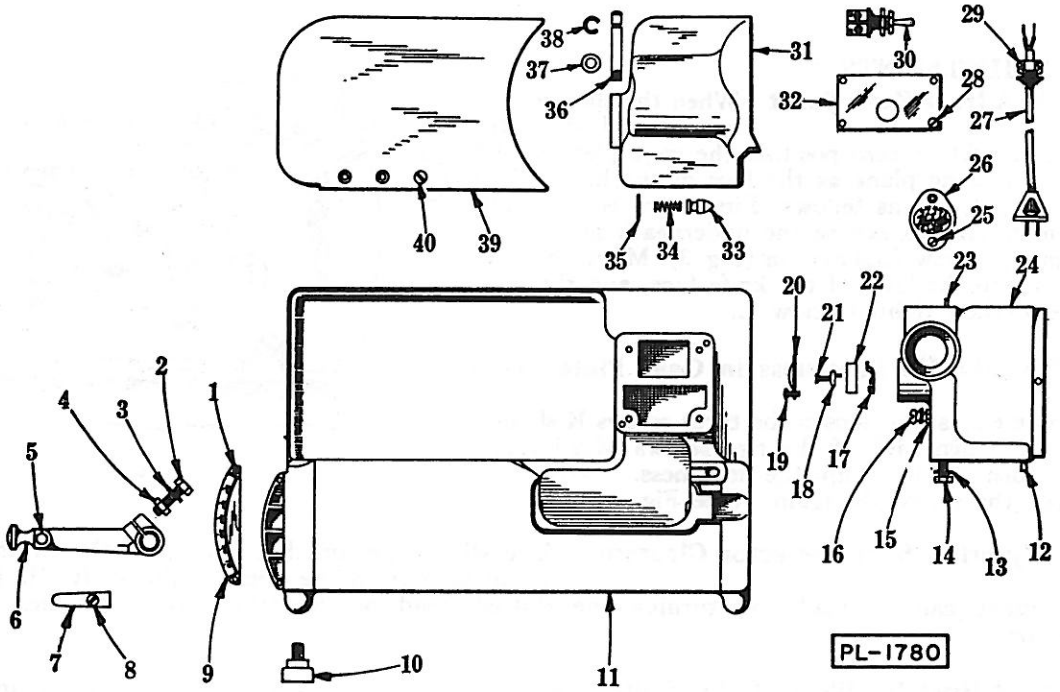

BASE & MAIN FRAME UNIT

ILLUS. PL-1780	PART NO.	NAME OF PART	AMOUNT
1	SC-15-8	Mach. Screw - #6-32 x 1/4" Oval Ctsk. Hd.	2
2	SC-36-30	Finish. Bolt - 5/16"-18 x 1-1/2" Hex Hd.	1
3	WL-3-45	Lock Washer - 5/16" x .143" x .108"	1
4	NS-13-11	Full Nut - 5/16"-18 Hex Finish	1
5	V-14222	Shoe - Adjusting Handle	1
6	R-14115	Handle - Adjusting	1
7	V-14592	Spring - Adjusting Handle	1
8	SC-8-68	Mach. Screw - 1/4"-20 x 1/2" Rd. Hd.	1
9	M-18212	Plate - Slice Indicator	1
10	M-16500	Foot	4
11	T-14116	Base & Receiving Pan	1
12	P-11800-90	Dowel	2
13	WL-4-2	Lock Washer - 3/8" x .136" x .070"	4
14	SC-36-72	Finish. Bolt - 3/8"-16 x 1" Hex Hd.	4
15	NS-17-7	Jam Nut - 5/16"-18 Hex Finish.	1
16	M-10941	Stud - Stop	1
17	V-15657	Spring - Finger (Use 2 when reqd.)	1
18	V-14205	Washer - Rotor Shaft (Incl. Pin)	1
19	SC-15-18	Mach. Screw - #8-32 x 3/8" Oval Ctsk. Hd.	4
20	M-14204-1	Cap - Rotor Shaft Bearing	1
21	SC-13-64	Mach. Screw - #10-32 x 5/8" Flat Hd.	1
22	BB-5-7	Ball Bearing - N.D. #7501	1
23	P-11800-88	Dowel	2
24	T-14145-2	Frame - Motor	1
25	SC-15-64	Mach. Screw - 1/4"-20 x 1/2" Oval Ctsk. Hd.	2
26	M-14193	Cap - Knife Shaft	1
27	S-23552-1	Cord & Plug (2 Conductor)	1
28	SC-7-73	Mach. Screw - #10-24 x 5/16" Rd. Hd.	4
29	FE-2-24	Connector - Cord	1
30	SS-6-3	Switch (Give Elec. Spec.)	1
31	S-14124-1	Deflector	1
32	M-15584	Lid - Switch Box	1
33	V-13289	Plunger	1
34	V-3605	Spring	1
35	PG-3-1	Groov-Pin - Type 1, 1/16" x 5/8" Lg.	1
36	M-15612	Pin - Hinge	1
37	WS-6-27	Washer	1
38	V-15591	Ring - Friction	1
39	S-17309	Plate - Gage	1
40	SC-22-40	Cap Screw - 1/4"-20 x 3/4" Flat Hd.	3

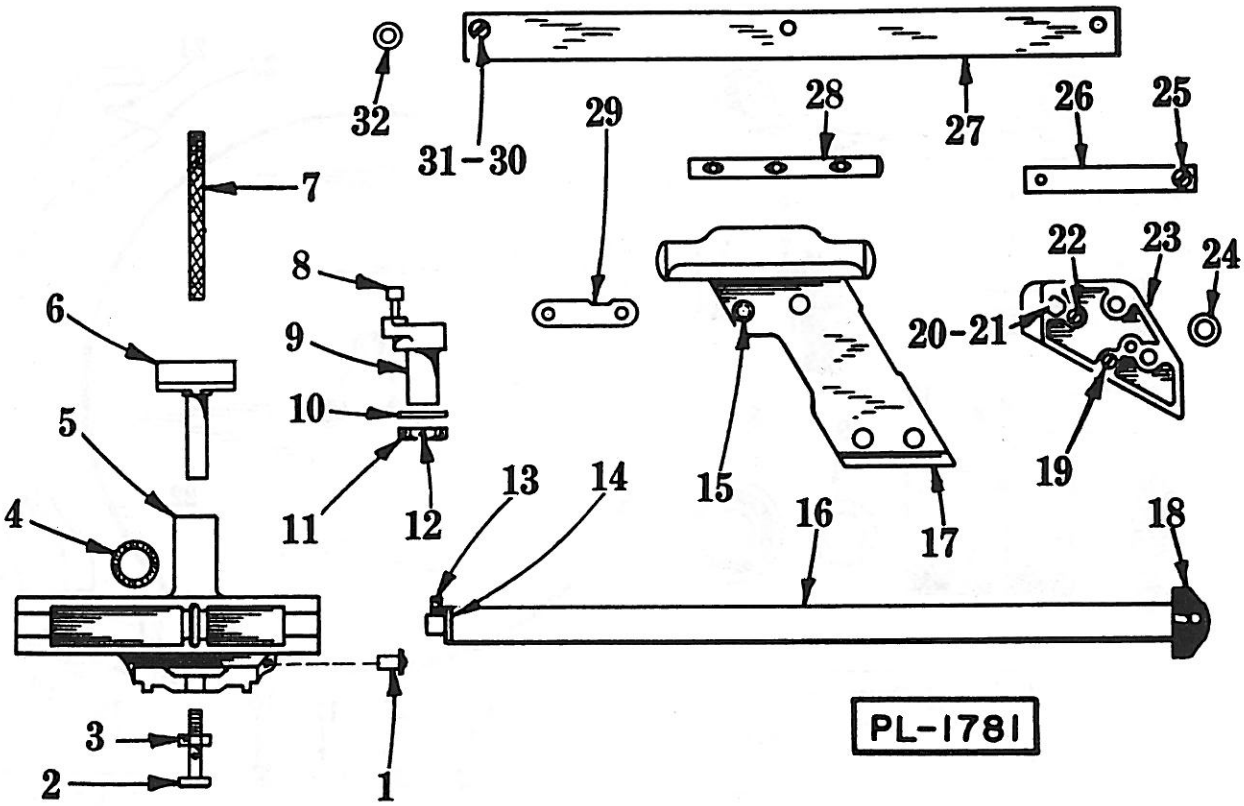

CARRIAGE BEARING & SLIDE ROD UNIT

ILLUS. PL-1781	PART NO.	NAME OF PART	AMOUNT
1	OG-3-28	Oiler	1
2	V-14138	Stud - Carriage Tray	1
3	NS-17-15	Jam Nut - 3/8"-16 Hex Finish.	1
4	WS-12-29	Washer - Felt	1
5	S-14123	Bearing - Front Carriage	1
6	M-14114	Bearing - Rear Carriage	1
7	V-14658	Wicking - Carriage Bearing	1
8	V-14216	Pin - Adjusting Arm	1
9	M-14112	Arm - Adjusting	1
10	WS-8-19	Washer - Adjusting Arm	1
11	V-14198	Nut - Adjusting Arm Shaft	1
12	PC-4-18	Cotter Pin - 3/32" x 1-1/4" Lg.	1
13	V-14239	Stud - Special	1
14	M-14461-3	Washer - Flat Spring	1
15	V-14135	Stud - Gage Plate Base	1
16	P-14130	Rod - Slide	1
17	R-14113-2	Base - Gage Plate	1
18	V-13162-1	Bumper	2
19	V-22660	Plug - Inspection	1
20	SC-37-97	Finish. Bolt - 5/16"-18 x 3/4" Hex Hd.	3
21	WL-3-41	Lock Washer - 5/16" x .117" x .056"	3
22	V-14600	Screw - Clamp Adjusting	2
23	R-14179	Clamp - Gage Plate Base	1
24	WS-8-1	Washer - Shim (For Gage Plate Base Clamp)	As reqd.
25	SC-15-64	Mach. Screw - 1/4"-20 x 1/2" Oval Ctsk. Hd.	2
26	V-14140	Strip - Retaining	1
27	P-14131	Bar - Slide	1
28	M-14133	Rod - Gage Plate Anchor	1
29	V-14134	Link - Adjusting Arm	1
30	SC-9-5	Mach. Screw - 5/16"-18 x 7/8" Rd. Hd.	3
31	WL-3-41	Lock Washer - 5/16" x .117" x .056"	3
32	WS-5-30	Washer - Shim (For Slide Bar)	As reqd.

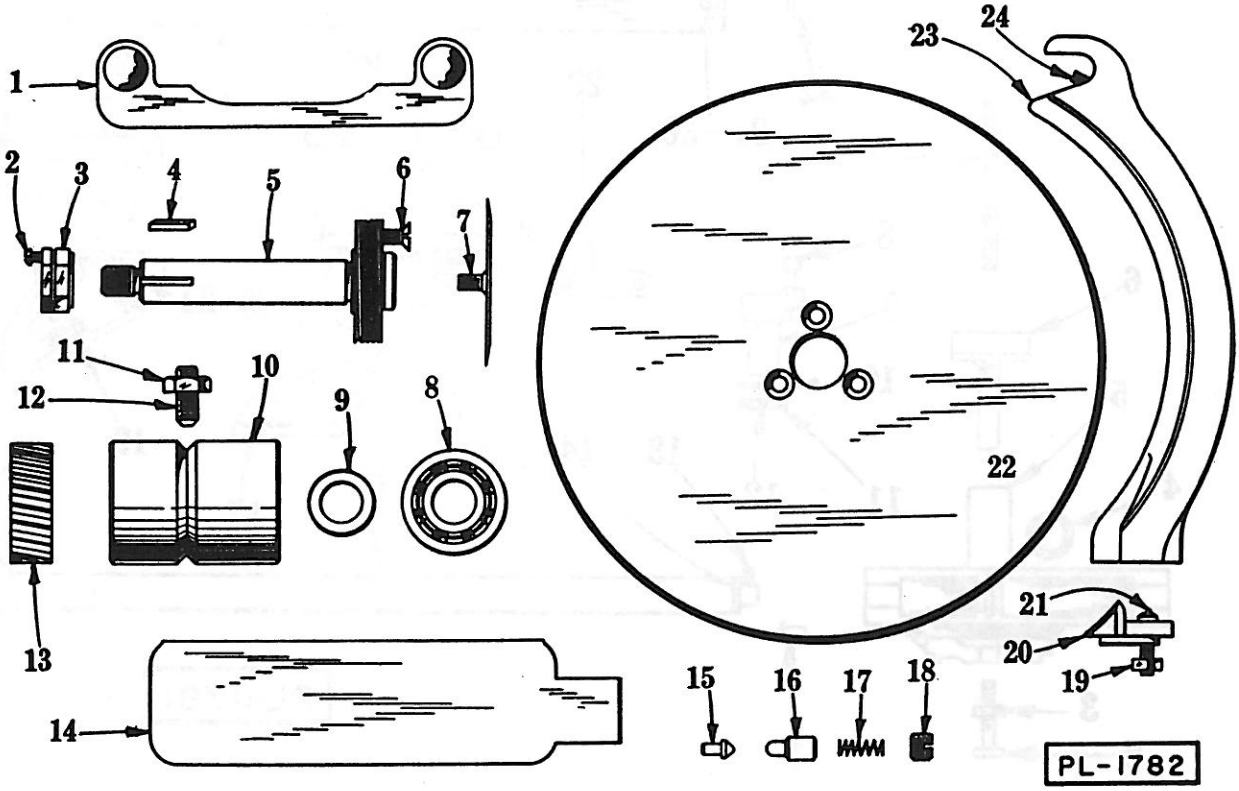

KNIFE, GEAR & GUARD UNIT

ILLUS. PL-1782	PART NO.	NAME OF PART	AMOUNT
1	M-14568	Upper Knife Guard Assy.	1
2	SC-7-42	Mach. Screw - #8-32 x 1/2" Rd. Hd.	1
3	V-13172	Nut - Retaining	1
4	R-12430-6	Key	1
5	P-14214	Shaft - Knife	1
6	SC-39-4	Cap Screw - 1/4"-20 x 5/8" Flat Hd.	3
7	P-15688	Disc - Knife Cover	1
8	BB-5-41	Ball Bearing - N.D. #7504	2
9	V-14207	Collar - Knife Shaft	1
10	M-14199	Retainer - Bearing	1
11	NS-19-15	Jam Nut - 3/8"-16 Hex Finish.	1
12	SC-47-45	Set Screw - 3/8"-16 x 7/8" Soc. Hdls. Cup Pt.	1
13	M-14201	Gear - Spiral (26T)	1
14	P-14117-1	Guard - Lower Knife	1
15	V-14599	Retainer - Guard	1
16	V-14597	Plunger	1
17	V-14619	Spring	1
18	V-14598	Retainer - Plunger	1
19	NS-8-10	Nut - 1/4"-20 Square	1
20	M-14120	Bracket - Rear Knife Guard	1
21	V-14128	Screw - Knife Guard Bracket Retaining	1
22	S-14125	Knife	1
23	R-14119	Guard - Rear Knife	1
24	V-14238	Screw - Adjusting	1

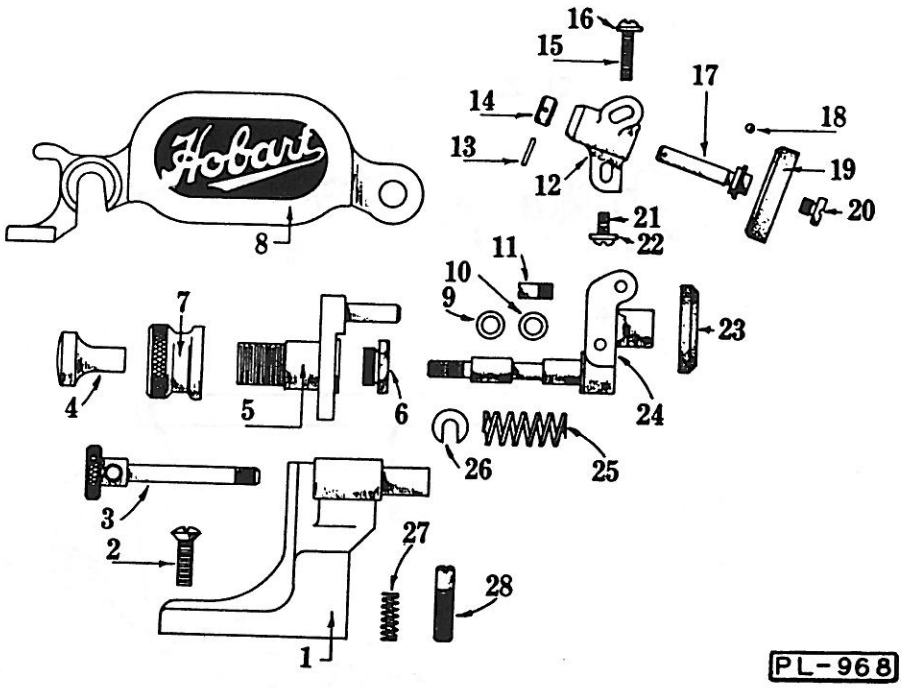

GRINDER UNIT

ILLUS. PL-968	PART NUMBER	NAME OF PART	AMOUNT
1	S-13203-2	Pedestal - Grinder Housing	1
2	SC-15-70	Mach. Screw - 1/4"-20 x 1" Oval Ctsk. Hd.	2
3	M-22164	Screw - Knurled Thumb	2
4	V-13196-2	Knob - Pull Rod	1
5	P-13224	Guide - Wheel Carrier	1
6	V-13193	Bushing	1
7	M-13220-3	Nut - Thumb	1
8	S-13202-2	Housing - Grinder	1
9	WS-3-11	Washer	1
10	WS-3-14	Washer	As reqd.
11	V-5014	Stud	1
12	P-14434	Carrier - Grinding Wheel	1
13	PG-3-8	Groov-Pin - Type #1, 3/32" x 1/2" Lg.	2
14	V-13199	Collar - Grind & Truing Wheel Shaft	2
15	SC-8-53	Mach. Screw - #12-24 x 1" Rd. Hd.	1
16	WS-2-29	Washer	1
17	M-13197	Shaft - Grind & Truing Wheel	2
18	BA-2-1	Ball - 1/8" Dia.	18
19	M-13200	Wheel - Grinding	1
20	V-3404-3	Screw - Special	2
21	SC-8-48	Mach. Screw - #12-24 x 1/2" Rd. Hd.	1
22	WS-2-29	Washer	1
23	M-13201	Wheel - Truing	1
24	R-14433	Carrier - Truing Wheel	1
25	V-17325	Spring	1
26	V-13194	Washer - Special "U"	2
27	V-10755-1	Spring	1
28	V-13284	Screw - Special	1
	M-60607	Grinding Unit Sub-Assy. (Includes items #4, 5, 6, 7, 9, 10, 11, 12, 13 14, 15, 16, 17, 18, 19, 20, 21, 22, 23, 24, 25 & 26)	

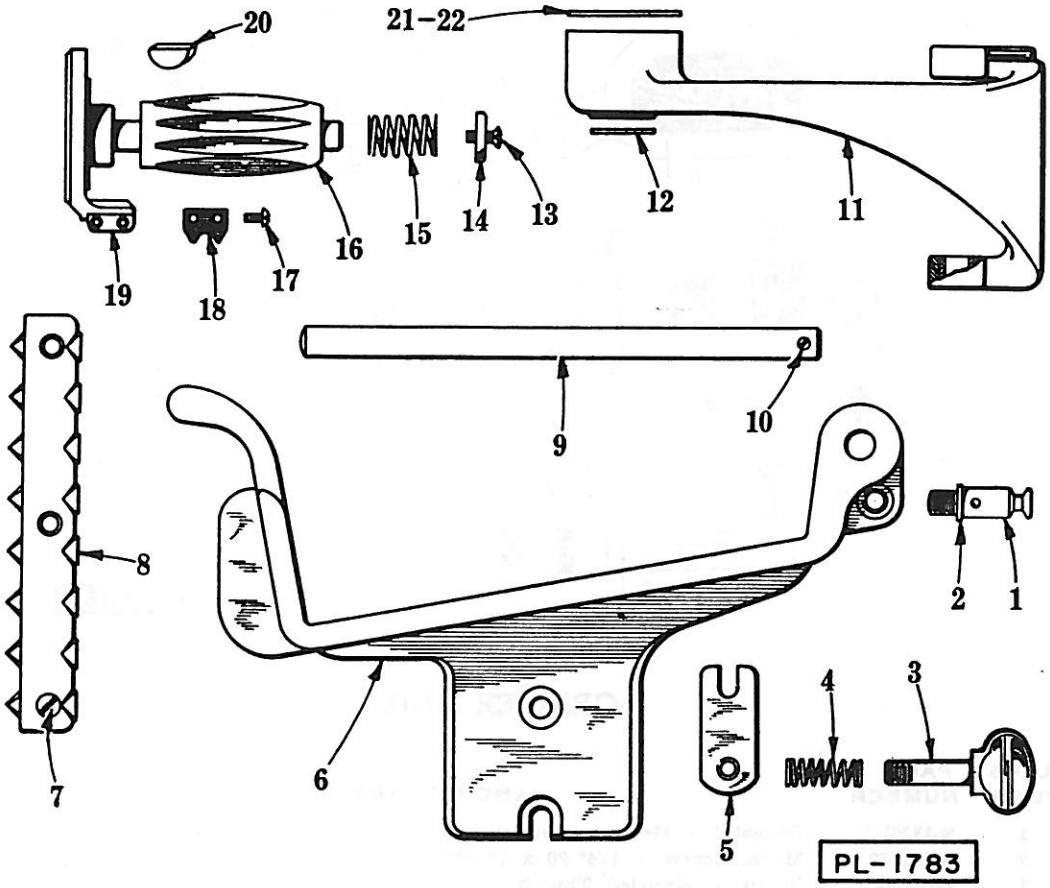

CARRIAGE UNIT

ILLUS. PL-1783	PART NO.	NAME OF PART	AMOUNT
1	V-16883	Stop - Carriage Arm	1
2	WS-6-34	Washer	1
3	M-14137	Thumb Screw	1
4	V-16888	Spring - Clamp Bar	1
5	V-16887	Bar - Clamp	1
6	T-16882	Tray - Carriage	1
7	SC-15-26	Mach. Screw - #8-32 x 5/16" Oval Ctsk. Hd.	3
8	P-14277	Bottom - Meat Grip	1
9	V-14194	Rod - Slide	1
10	SC-46-18	Set Screw - #10-24 x 1" Slotted Hdls. Cup Pt.	1
11	S-16885	Arm - Carriage	1
12	WS-8-17	Washer	1
13	SC-15-34	Mach. Screw - #10-24 x 1/2" Oval Ctsk. Hd.	1
14	V-10949	Washer	1
15	V-10818	Spring	1
16	M-13180	Handle - Carriage	1
17	SC-7-8	Mach. Screw - #4-40 x 1/4" Rd. Hd.	4
18	V-13900	Slide - Meat Grip	2
19	S-14188	Grip - Meat	1
20	KW-3-5	Woodruff Key - #405	1
21	WS-13-6	Washer	As reqd.
22	WS-13-5	Washer	As reqd.